Intersystem Pressure Transducer
Type PM-22

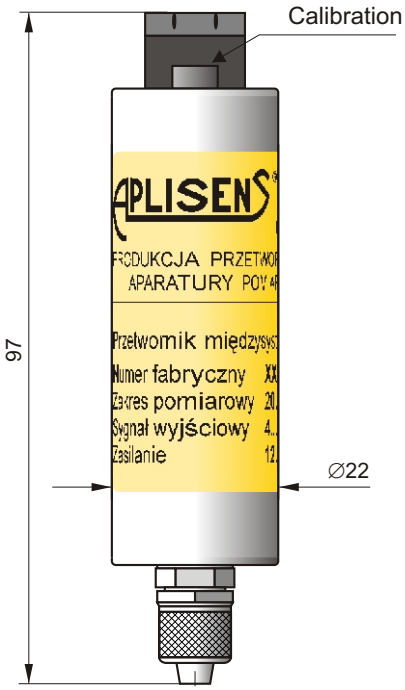

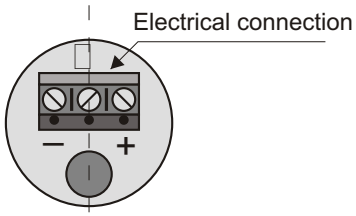

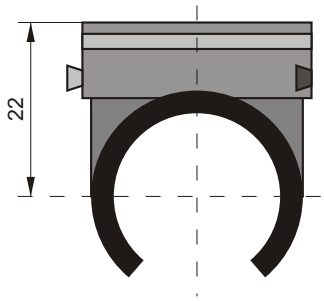

clamping ring

Electrical connection PD

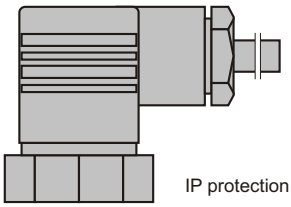

IP protection **IP 65**

- ✓ **Input signal 20...100 kPa**
- ✓ **Output signal 4...20 mA**
- ✓ **Accuracy 0,16%**

Application

The PM-22 pressure transmitter is applicable to convert standard pressure signal for standard current 4-20mA signal. of the pressure, underpressure and absolute pressure of gases, vapours and liquids.

Construction

The active sensing element is a piezoresistant silicon sensor. Standard input connection is through tip clamp adapted to connection with the flexible tube Ø 6 × 1.

The electronics is placed in a casing with a degree of protection IP 65 or IP 67, depending on the type of electrical connection applied.

PM-22 transmitter is available with two version electrical connection standard plug clamp and optionally with connector DIN43650.

Calibration

Potentiometers can be used to shift the zero position and the range by up to ±10%, without altering the settings.

Technical data

Accuracy	0,16%
Hysteresis, repeatability	0,05%
Thermall error	0,2% / 10°C
Temperature compensation range	0...50°C
Power supply	10,5...36 V DC
Load resistance	$R[\Omega] \le \frac{U_{zas}[V] - 10{,}5\,V}{0{,}02\,A}$

Ordering procedure

Standard version
(Input 20...100 kPa, Output 4...20 mA: **PM-22**

Special version : **PM-22 /___/__÷__**

PD - electrical connector DIN 43650

Converting pressure range 1 kPa to 200 kPa

HISPACONTROL S.L.
Pº Delicias 65 Bis
28045 Madrid
Tel. 915 308 552
hc@hispacontrol.com
www.hispacontrol.com